OAK-D-IOT-75

> **Warning**
>
> OAK IoT series is now **community supported only**, and is **provided as-is**. This means we most likely **won't update it** and **we don't provide support** for it (Discord, forums, email...).

Buy it on Luxonis shop

Overview

The **OAK-D-IoT-75** baseboard has three on-board cameras which implement stereo and RGB vision, piped directly into the OAK-SoM-IoT for depth and AI processing. The data can be then output to a host via USB 3.1 Gen1 (Type-C) or via ESP32 WiFi interface. If you are **new to OAK IOT devices, you can check** Getting started with OAK IoT devices tutorial.

This design is one of two baseboards for the OAK-SoM-IoT, the other one being OAK-D-IOT-40. The only difference is the the stereo baseline distance and the shape/size of the OAK camera.

Hardware specifications

This OAK camera uses USB-C cable for communication and power. It supports both USB2 and USB3 (5Gbps / 10Gbps).

Camera module specifications

You can select either Fixed Focus (FF) **or** Auto Focus (AF) color camera, more information here.

Camera Specs	Color camera	Stereo pair
Sensor	IMX378 (PY004 AF, PY052 FF)	OV9282 (PY003)
DFOV / HFOV / VFOV	81° / 69° / 55°	89° / 80° / 55°
Resolution	12MP (4056x3040)	1MP (1280x800)
Focus	AF: 8cm - ∞ **or** FF: 50cm - ∞	FF: 19.6cm - ∞
Max Framerate	60 FPS	120 FPS
F-number	1.8 ±5%	2.0 ±5%
Lens size	1/2.3 inch	1/4 inch
Effective Focal Length	4.81mm	2.35mm
Pixel size	1.55µm x 1.55µm	3µm x 3µm

RVC2 inside

This OAK device is built on top of the RVC2. Main features:

- **4 TOPS** of processing power (1.4 TOPS for AI - RVC2 NN Performance)
- **Run any AI model**, even custom-architectured/built ones - models need to be converted.
- **Encoding**: H.264, H.265, MJPEG
- **Computer vision**: warp/dewarp, resize, crop via ImageManip node, edge detection, feature tracking. You can also run custom CV functions
- **Stereo depth** perception with filtering, post-processing, RGB-depth alignment, and high configurability
- **Object tracking**: 2D and 3D tracking with ObjectTracker node

Dimensions and Weight

Weight: 89g total (with enclosure), 49g PCBA & SOM only

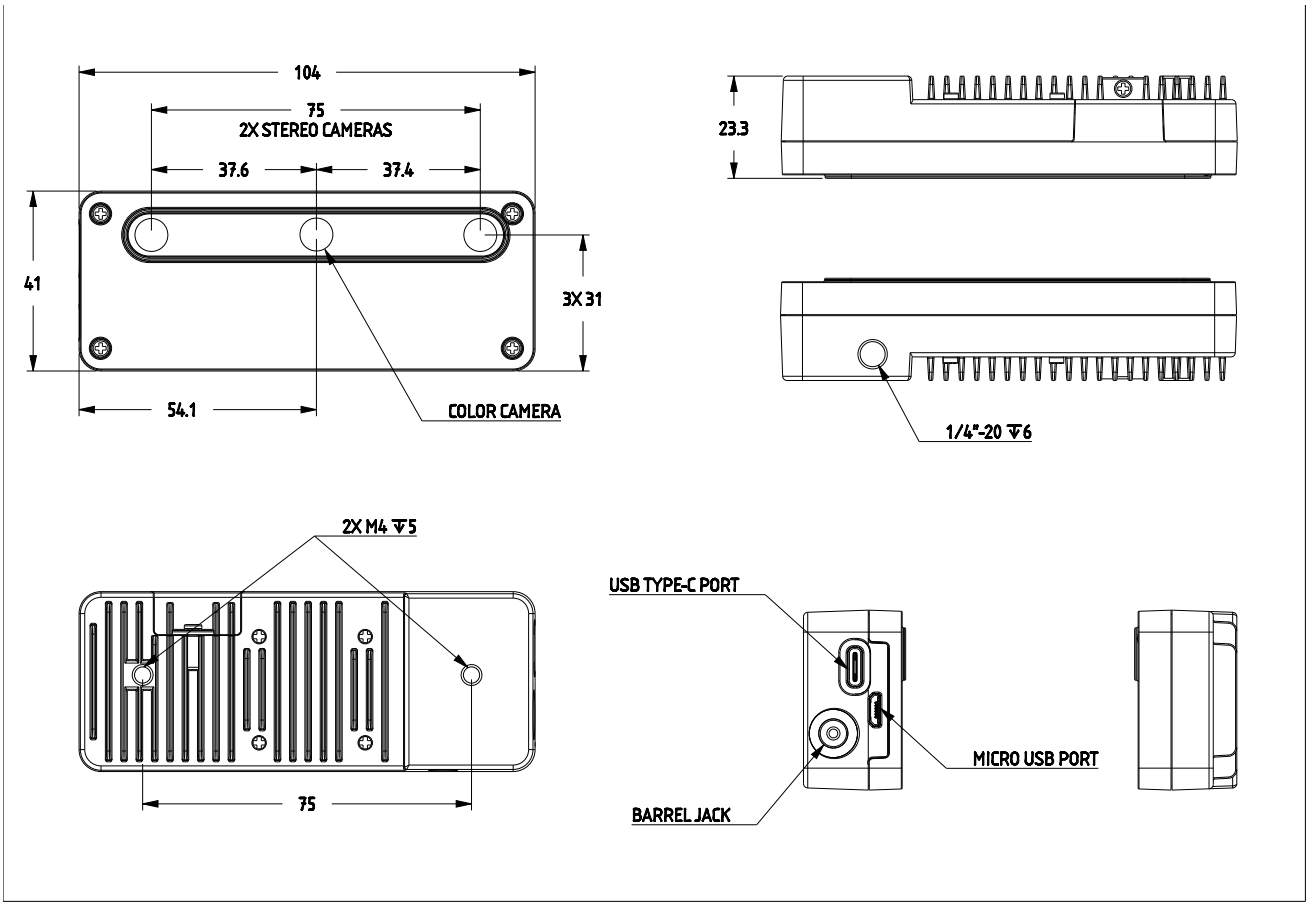

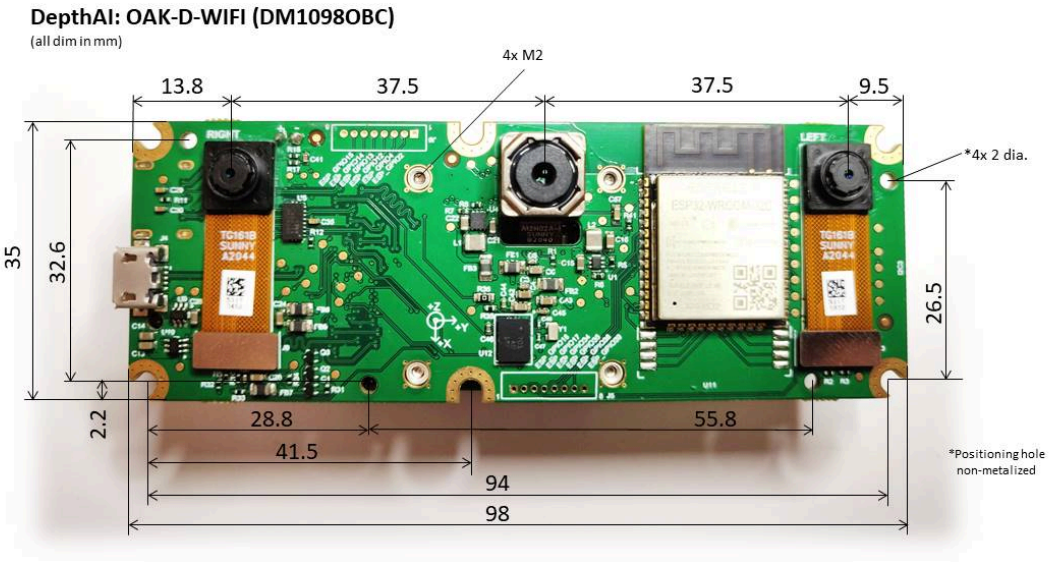

Stereo depth perception

This OAK camera has a baseline of 7.5cm - the distance between the left and the right stereo camera. Minimal and maximal depth perception (MinZ and Max) depends on camera FOV, resolution, and baseline; more information here.

- Ideal depth range: 70cm - 12m
- MinZ: ~20cm (400P and extended), ~35cm (400P **OR** 800P, extended), ~70cm (800P)
- Median depth accuracy (See 800P, 75mm baseline distance OAKs for details):

- below 4m: below 2% absolute depth error
- 4m - 7m: below 4% absolute depth error
- 7m - 10m: below 6% absolute depth error

Getting started

OAK-D-IoT-75 Integrates ESP32-WROOM-32D (Wi-Fi 2.4 GHz to 2.5 GHz) and in terms of power consumption the device accepts 5V (+/-10%) from a 5.5m x 2.5mm barrel jack or via USB 3.1 Gen1 Type-C

Interfacing with the OAK-SoM-IoT is also possible with DM1098OBC_WiFi connector pads J5, and J6. These pads are designed for the Molex/53047-0810 or equivalent. Please refer to the schematics for pinout information.

The reset button resets the OAK-SoM-IoT only.

The 5V LED indicates 5V power is present on the DM1098OBC. The PG LED indicates "power good" from the OAK-SoM-IoT. The "RUN" LED indicates that the OAK-SoM-IoT is not in reset.

Here is an example how to connect to the wifi and creates a basic http file server.

Power consumption

Most of the power is consumed by the RVC2, so the power consumption mostly depends on the workload of the VPU:

- Base consumption + camera streaming: 2.5W - 3W
- AI subsystem consumption: Up to 1W
- Stereo depth pipeline subsystem: Up to 0.5W
- Video Encoder subsystem: Up to 0.5W

So the total power consumption can be up to ~5W if you are using all the features at 100% at the same time. To reduce the power consumption, you can reduce FPS of the whole pipeline - that way, subsystems won't be utilized at 100% and will consume less power.

Operating temperature

The ambient operating temperature of RVC2 based devices is between **-20°C and 50°C** when fully utilizing the VPU.

Similarly to the Power consumption, max operating temperature depends on VPU utilization. The higher the VPU utilization, the more heat the VPU will generate. The RVC2 VPU can continuously operate at 105 °C, after which the depthai library will automatically shut down the device (to avoid chip damage).

To find out more, see our Operative temperature range documentation.

Datasheet

- Datasheet

3D Models

- Board STEP files here
- Enclosure STEP files here

Files

- Altium Design Files
- Assembly Drawing
- Assembly Outputs
- Fabrication Drawing
- Fabrication Outputs
- Schematic

Got questions?

Head over to **Discussion Forum** for technical support or any other questions you might have.